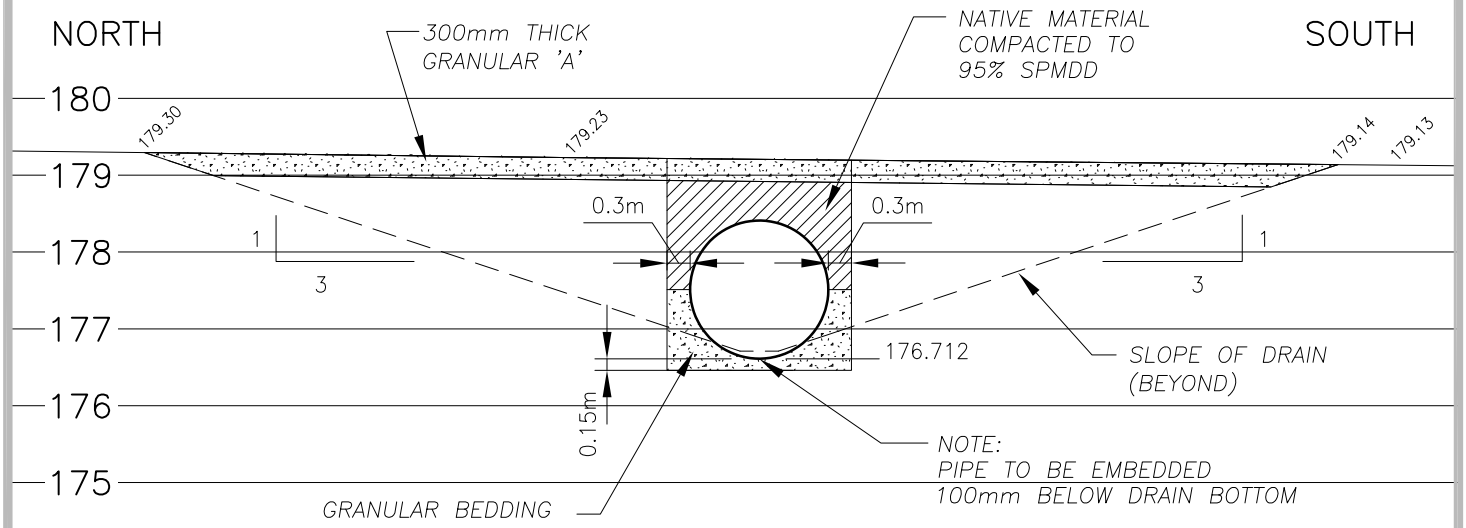


## Sta. 0+211

1800 GALVANIZED CORRUGATED HEL-COR PIPE

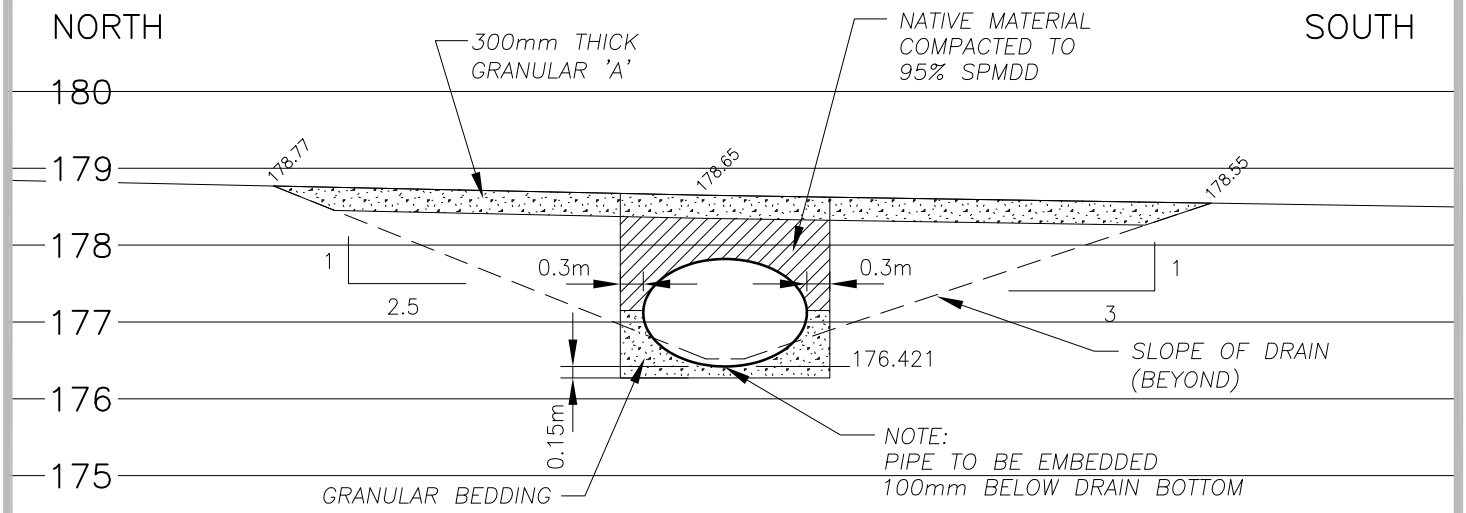


## Sta. 0+794

2130X1400 GALVANIZED CORRUGATED HEL-COR PIPE ARCH

PROJECT NO. ____ 165601127
DATE _____ 2010.07.26

# SKETCH NO. 1 - ADDENDUM NO. 1

W:\active\165601127_east_side_arterial_drain_leamington\design\drawing\civil\SKETCH NO. 1.dwg
2010-07-27 09:43AM By: dwatson